eyeLock®
Advanced Iris Identity Authentication

NanoFace® Face Recognition System

Next Generation Embedded Face Recognition Terminal

Covers both NanoFace-2 and NanoFace-2N Models

System User Guide (v1.0.4)

December 2023

About This Manual

NanoFace-2 (all references include both 2 and 2N models) is an advanced face recognition terminal that provides highly accurate face recognition in an embedded system. This manual contains the descriptions and operational instructions for NanoFace-2 device. It is intended and written for system administrators who are in charge of overall operation including installation and management. We recommend you familiarize yourself with this manual in order to make use of the product correctly and effectively.

- The figures and screenshots in this guide are given for illustration purposes only and may differ from the actual product.
- Due to continuous technological improvements, the guide may not contain the most updated information. For further information not covered in this guide, please contact us at service@eyelock.com

Revision History

Version	Date	Description	Note
1.0.0	2021-06-18	Initial release	
1.0.1	2021-10-18	Updated Appendix A: OSD Menu List	

Conventions in This Manual

The following symbols are used throughout this manual. Make sure that you fully understandthe meaning of each symbol and follow the instructions accompanied.

Symbol	Name	Description
	WARNING	Indicates information that should be followed with the utmost care. Failure to comply with a warning could cause severe damage to the equipment or injury to personnel.
	CAUTION	Indicates a potentially hazardous situation which, if not avoided, could result in equipment damage, data loss, performance degradation, or unexpected results.
	IMPORTANT	Emphasizes essential information required for user success.
	NOTE	Provides important supplemental information that might enhance users' understanding or alternative steps to accomplish their goals.
	TIP	Provides optional information to help users be more successful in their tasks

Table of Contents

1. Introduction to NanoFace-2

NanoFace-2 is a face recognition terminal that provides face recognition in an embedded system with real-time subject finding and local authentication for high throughput access control and time & attendance applications.

1.1. Features

The key features NanoFace-2 are shown in the following table:

Feature	Description
Advanced real time subject tracking with simple user instructions	NanoFace-2 accurately locates the subject face in real time and tracks in 2 sides of angle to provides wider and deeper positioning.
Robust subject to camera operating range	Operating distance range (stand-off) from 0.4 to 2.0 meters
Wide angle face imaging for outstanding capture volume	Allows height range of 145 to 210 cm (65 cm) at subject to device distance of 2.0 m
Utilization of ultra-high performance face matching engines	Advanced, dedicated co-processor allows utilization of latest and most powerful face algorithms.
Supplemental display of authorization results	Can display authorization decision when coupled to access control provisioning logic so that “subject recognized, but not granted permission” information can be displayed.
Supports multiple languages in GUI	English, Korean, Simplified Chinese, Traditional Chinese, Japanese, Arabic, Spanish, Italian, Turkish, French
Large on-board (embedded) face template database	Store up to 20,000 active face templates on-board in 1:1 recognition (verification) identification mode. Store up to 20,000 active face templates on-board in 1:N identification mode.
Use in widest range of lighting conditions	Embedded illuminators in both white and NIR ranges expand use in adverse ambient light environments.
High speed face matching	Can provide up to 20,000 matches per second on-board.
Standard multi-band RFID reader	MiFare, DesFire, FeliCa card support with standard embedded ISO/IEC 14443 reader.
Full range of deployment options	Standard connections in include selectable Wiegand IN or OUT, GPI, RS 485, and contact relay
Power-over-Ethernet	Optional configuration for POE+ power delivery
Fully compatibility with Eyelock EIS access control and T&A solution software	Supports full integration with Eyelock EIS for distributed access control and T&A solutions on single network.

1.2. Components

Before you begin, make sure that all the following items are included with your device. If youfind anything is missing, contact your dealer.

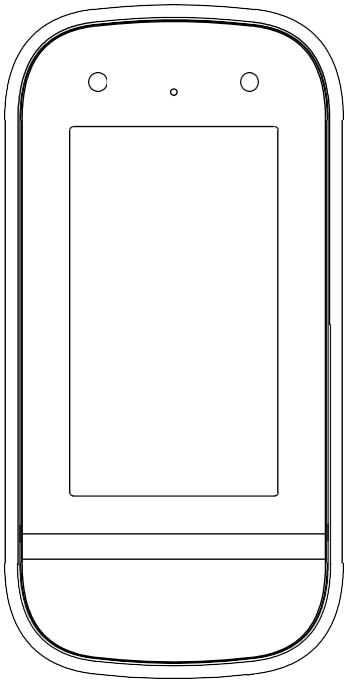

NovaFace-2

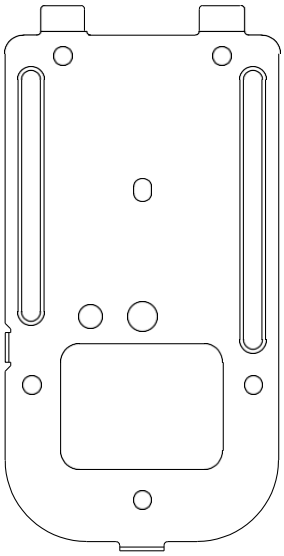

Mounting Plate

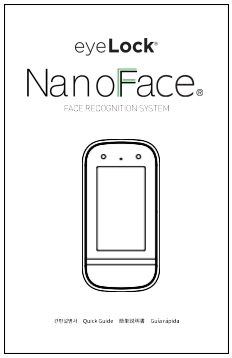

Quick Guide

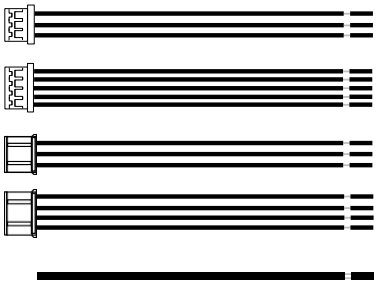

Cables

Diode

Table 1. NanoFace-2 component table

Name	Quantity	Description	Note
NanoFace-2	1	Main system / face recognition terminal	
Mounting Plate	1	Installs the unit on a wall or on an outlet box	
Diode	1	Prevents currents in unintended directions (See Relay Connection for an example of its use)	
Power cable	1	Connects user supplied power to device 	
Relay cable	1		
GPI cable	1		
Wiegand cable	1		
RS-485 cable	1		
AC adapter	1	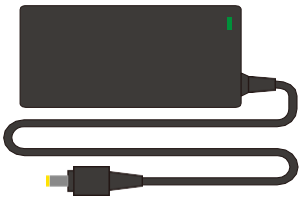	Output 15V DC, 2A
Power cord (optional)	1	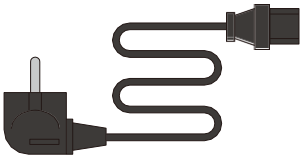	

1.3. Parts and Controls

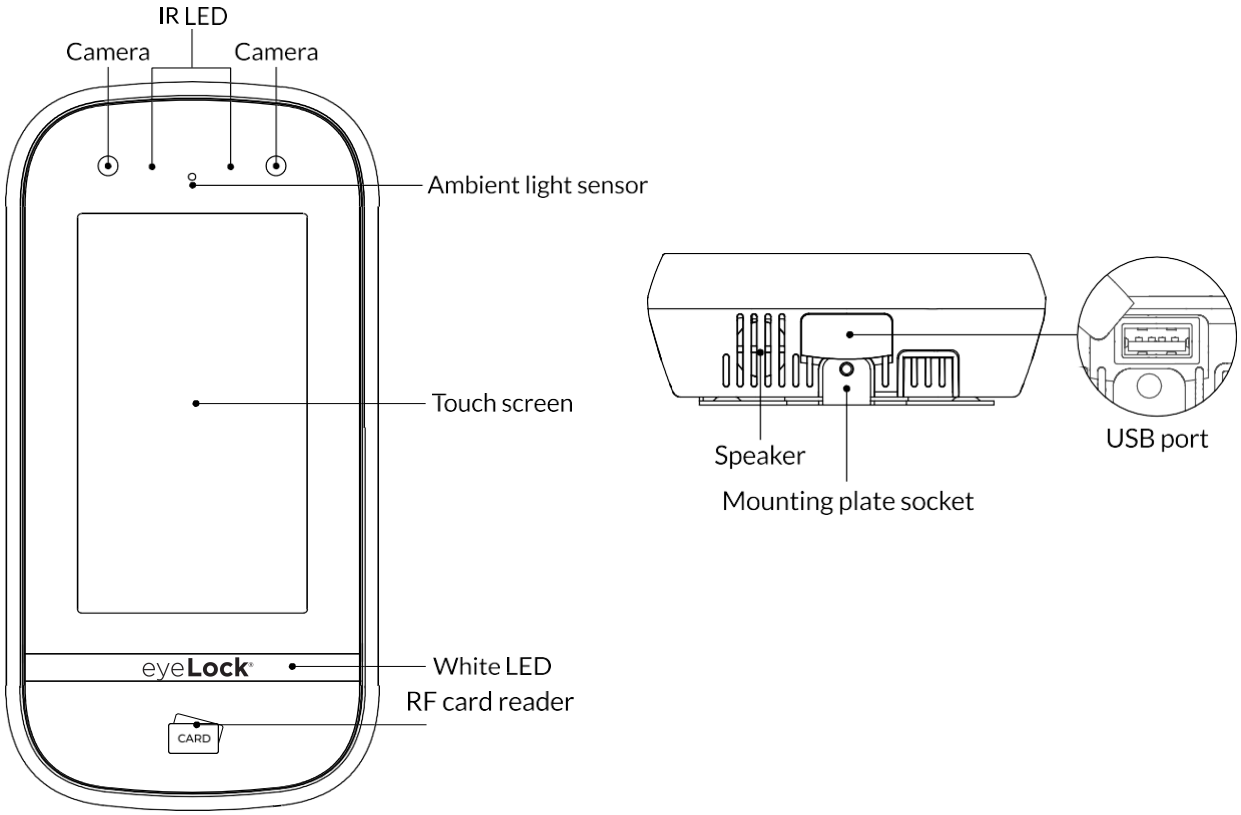

Name	Description	Note
Camera	Captures the face images	
IR LED	Illuminates the face using the NIR lighting when capturing the faces	
Touch screen	Shows preview images before capture and provides a graphical interface for enrollment and device configuration	
White LED	Gives supplemental illumination in dim ambient light	
RF card reader	Indicates the area where RF cards can be read	
Ambient light sensor	Detects the changes of light in the surrounding environment	
Speaker	Delivers sound from device	
Mounting plate socket	Attaches the unit with the mounting plate	
USB port	Connects a USB flash drive	

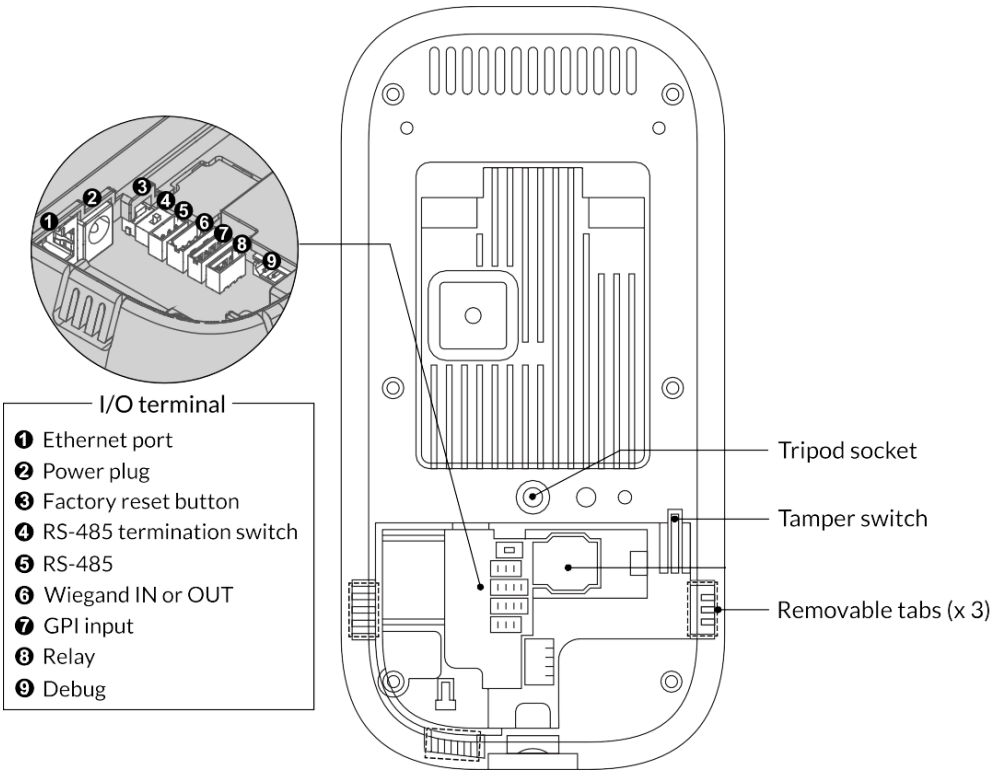

Name	Description
Tripod socket	Attaches a tripod (or equivalent mount) with a standard consumer tripod 1/4-20 UNC screw
Tamper switch	Starts an alarm, if configured, when a physical tampering attempt is detected
Removable tabs	Allow the wire routing and let cables go through the openings when removed
Ethernet port	Connects an ethernet cable
Power plug	Connects the power cable
Factory reset button	Restores the device to its original manufacturer settings
RS-485 termination switch	Provides termination when the device is located at the physical end of RS-485 wiring
RS-485	Connects the RS-485 cable
Wiegand input or output	Connects the Wiegand cable either as input or as output selectively
GPI input	Connects the GPI cable
Relay	Connect the relay cable
Debug	Reserved for debugging purposes only

NOTE: Optional configuration available for POE+ power input (not shown above) as special order

1.4. Touch Screen

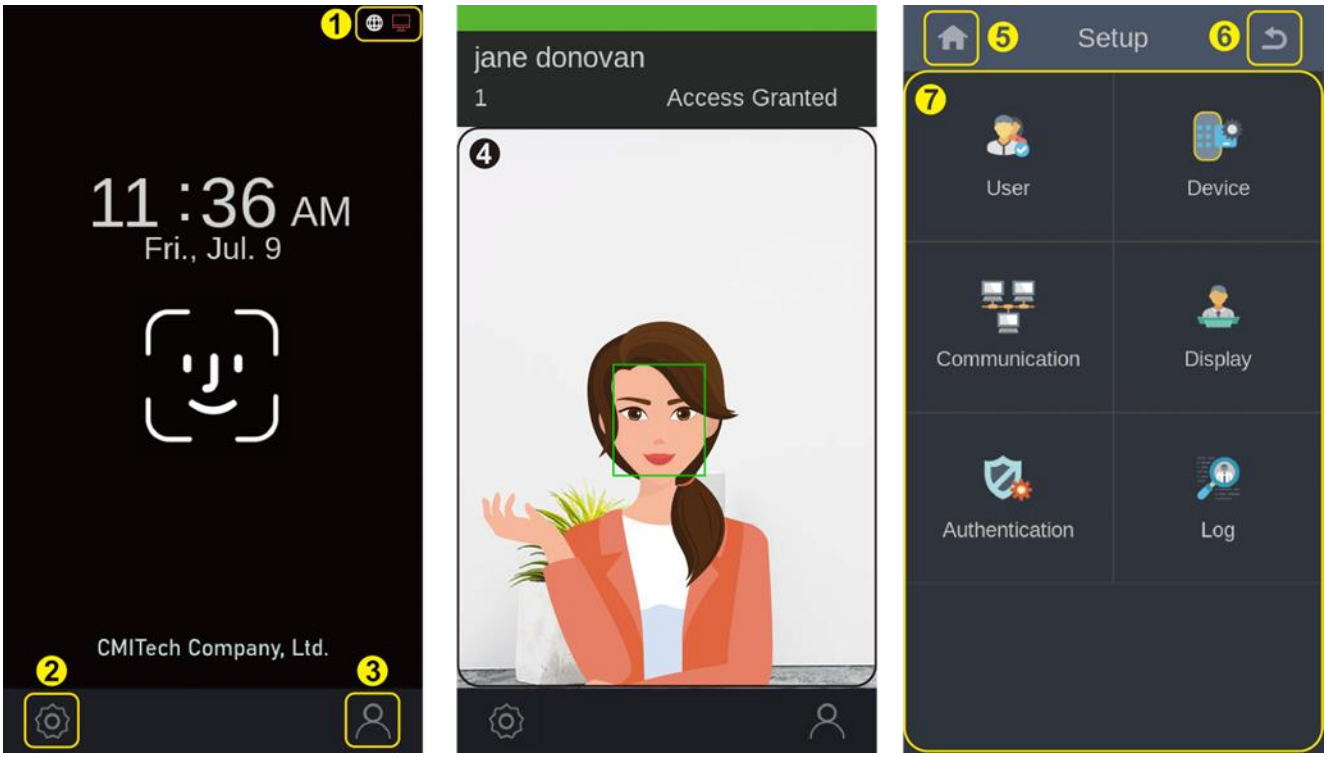

No.	Name	Description	Note
1	Status indicator	Shows the status of network connection and third party application	• White: online • Red: offline or not usable
2	**Settings** button	Enters the device setup menu screen	
3	**Enrollment** button	Enters the user enrollment menu screen	
4	Preview screen	Gives a preview of subject's face	
5	**Home** button	Goes to the home screen	
6	**Back** button	Goes back to the previous menu screen	
7	Settings	Shows settings menu – User, Device, Communication, Display, Authentication, Log	

1.5. Accessories

No.	Name	Description
Mounting bracket	1	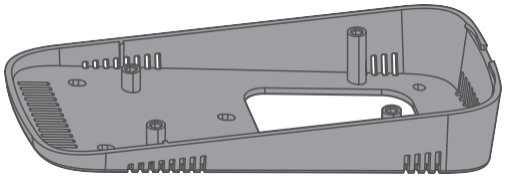
Secure I/O	1	
RF card writer	1	Duali RF card reader/writer

2. Installing NanoFace-2

This chapter gives information about the requirements and the prerequisites for installing NanoFace-2 and the installation procedures.

2.1. Installation Requirements

Before installation, make sure that the following requirements are met.

2.1.1. Environmental Requirements

The NanoFace-2 is designed and intended for indoor use only. The device is not weatherproof and must not be exposed to water, ice, extreme temperatures or other adverse weather conditions. If it is required to use the device in outdoor or extreme environments, contact local sales or service@eyelock.com for more information.

☑ Avoid the location that is exposed to backlight, direct sunlight, and other strong illumination.

☑ Choose the location with moderate ambient light.

Environmental requirements

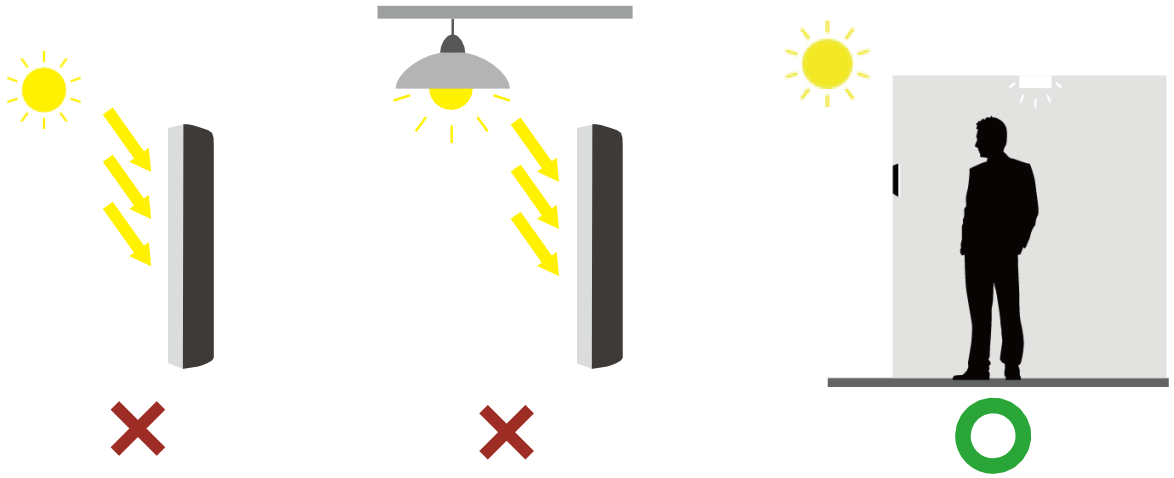

☑ Determine the height at which you install the device.

The recommended mounting height is 135 cm (53 inches) from the floor to the bottom of the device. It covers a person's height from 145 cm (57 inches) up to 210 cm (83 inches) at the distance of 200 cm (78 inches) from the device.

Recommended mounting height

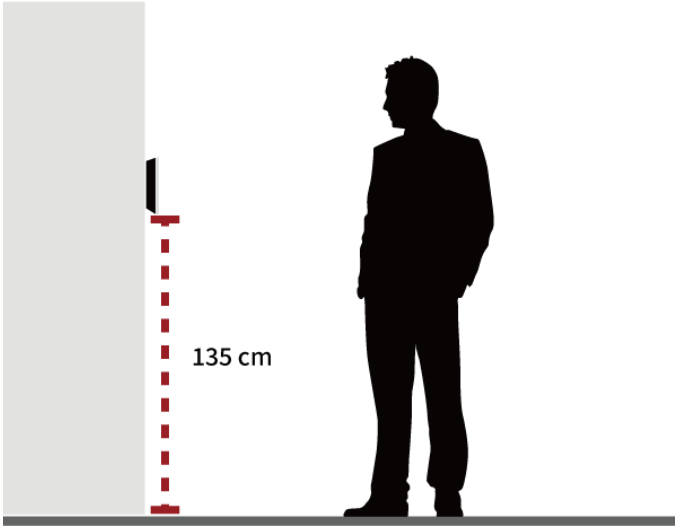

Typical

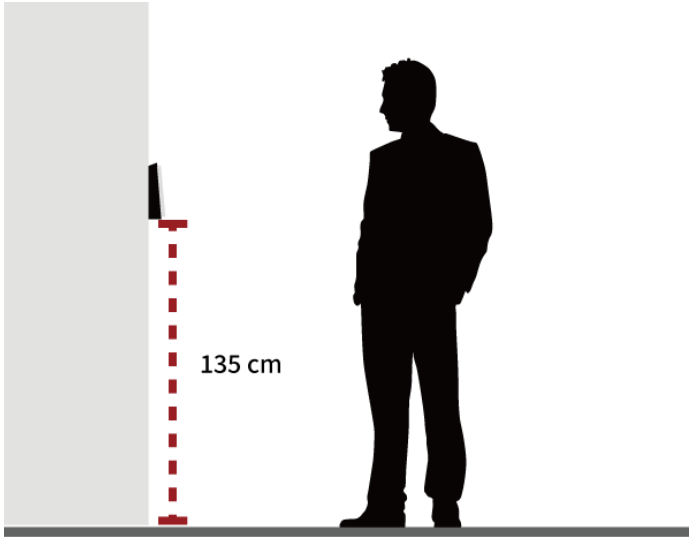

Mounting bracket (optional)

2.1.2. Electrical Requirements

☑ Use a stable power supply adapter and cabling in accordance with Table 2 below. Minimum current is 2.0 A. (Maximum actual voltage is 25 V DC.)

Note: usage of 12V DC is possible if there is no voltage drop due to either cable loss or fluctuations in mains (AC) power. Please contact EyeLock for more information.

☑ It is preferrable that the power cable is as short as possible. Ensure that wire gauge is correct in accordance with Table 2.

☑ Use CAT5 or better for Ethernet cable.

Table 2. Power requirements depending on cable length and wire gauge

Input voltage (V)	Wire gauge (AWG)	Power cable length (m)		Note
		Recommended	Maximum	
15	20	25.0	37.5	Standard Configuration
	22	15.7	23.6	
24	20	70.1	105.1	
	22	44.0	66.0	

2.1.3. Tool Requirements

The following tools can be necessary for installation and are not supplied by default.

Table 3. Required tools

Purpose	Name	Figure	Note
General	Screw driver		Cross head
	Tape ruler	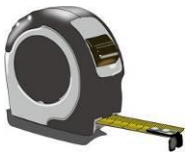	For measuring the installation height
	Cutting plier	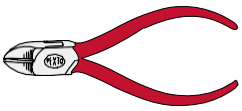	
Concrete wall mount	Electric drill		With a drill bit and anchor bolts
	Marker		
	Hammer		

2.2. Installation Procedure

2.2.1. Mounting Device (Wall Mount)

You can install the device onto a wall directly by using the mounting plate.

1. Remove the screw that attaches NanoFace-2 to the mounting plate and disassemble the plate.

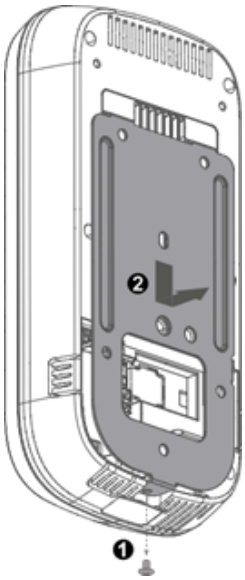

Keep the screw because it will be used to attach them again.

2. Put the mounting plate at the predetermined position and attach the plate onto the wall with the screws (M4 x 8 minimum)

Wall mounting points

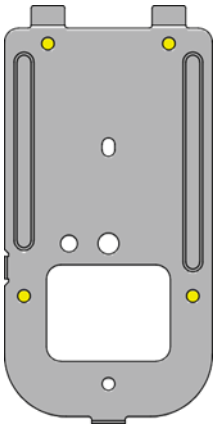

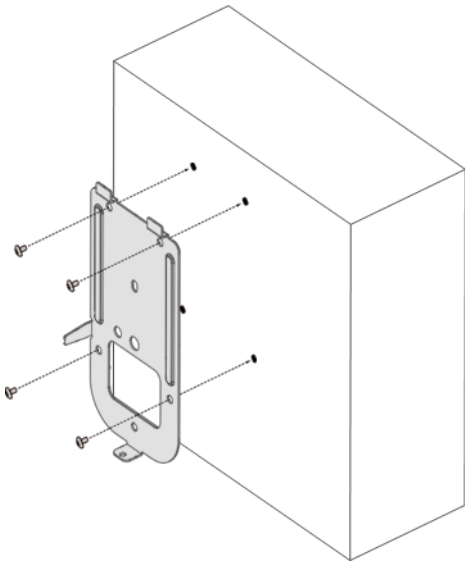

For concrete wall mount, do the following steps:

Put marks on the wall through the holes of plate by using a marker.

Drill the marked points by using an electric drill.

Attach the anchor bolts to the holes by using a hammer.

Attach the plate to the wall with the screws.

3. Connect the power cable and peripherals cables, if necessary, to the connectors in the rear panel. (See Connecting Cables for more information)
4. Remove one or more plastic tabs to allow the wire routing and let the cables go through the openings.

Removable tabs

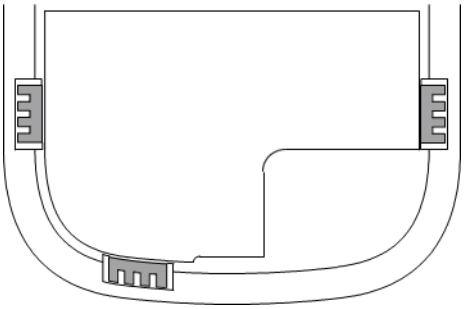

5. Put the device onto the installed plate, slide it downward, and attach them with the screw (M3 x 6)

2.2.2. Mounting Device (Gang Box Mount)

You can also install the device on a gang box (outlet box) by using the mounting plate.

1. Remove the screw that attaches NanoFace-2 to the mounting plate and disassemble them.

   Keep the screw because it will be used to attach them again.

2. Put the mounting plate onto the gang box and attach it to the box with the screws (M4 x 8).

Gang box mounting points

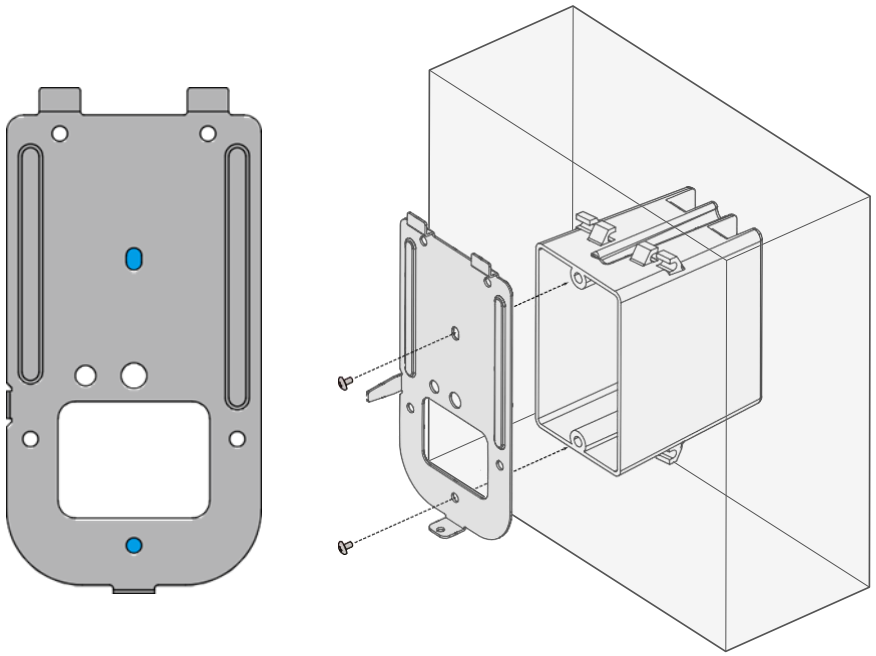

Make sure that the outgoing cables from the gang box go through the rectangular opening in the plate.

3. Connect the power cable and peripherals cables, if necessary, to the connectors in the rear panel. (See Connecting Cables for more information)
4. Put the device onto the installed plate, slide it downward, and assemble them with the screw (M3 x 6)

2.2.3. Connecting Cables

Power Connection

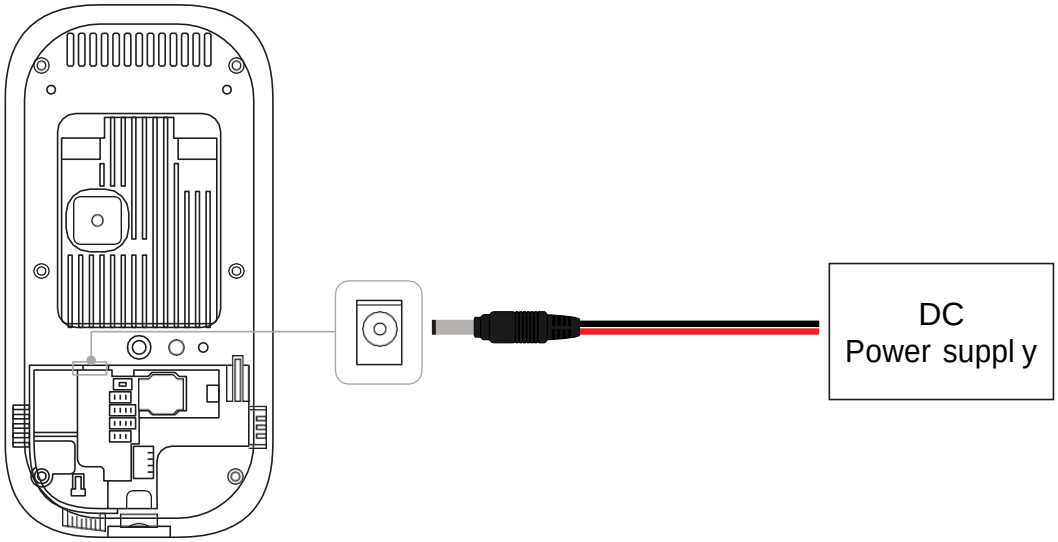

Network Connection

RJ-45 connector for 10/100/1000Base-T Ethernet communication, minimum CAT5 cable.

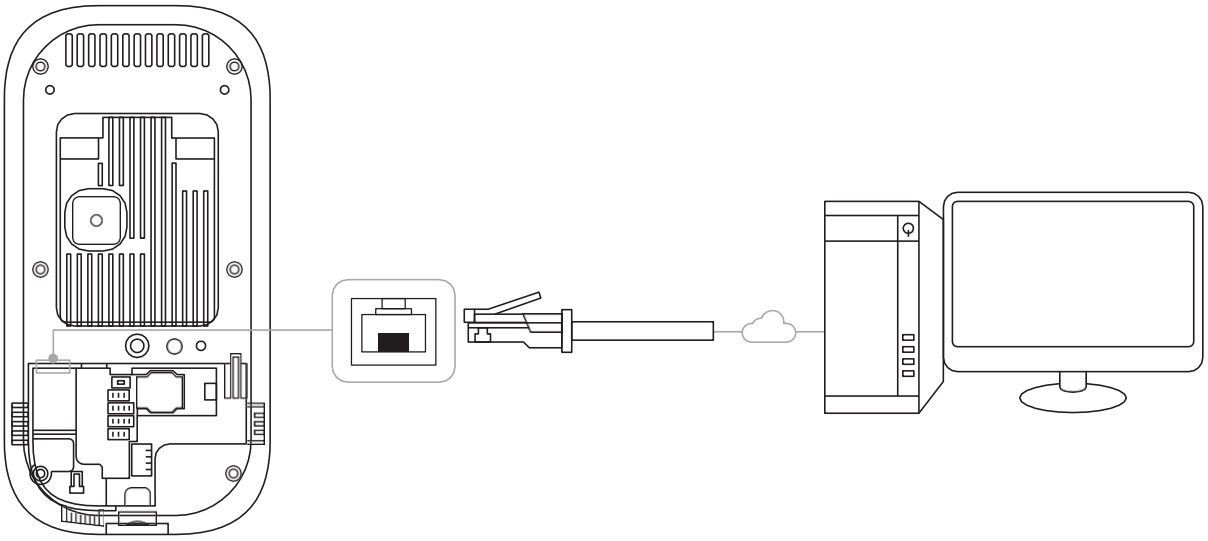

NOTE: Optional configuration available for POE+ power input (not shown above) as special order

Relay Connection – Dead-Bolt Type Door Lock

There are two types of dead-bolt door lock connections and configuration supported – fail-safeand fail-secure.

- Use different power supplies for the NanoFace-2 and the door lock.
- Install the diode at both ends of the circuit as shown in the figure below close to the door lock to protect the relay contact from the reverse current that occurs when the door lock works.
- Make sure that the diode direction is correct.

Fail-Safe Configuration

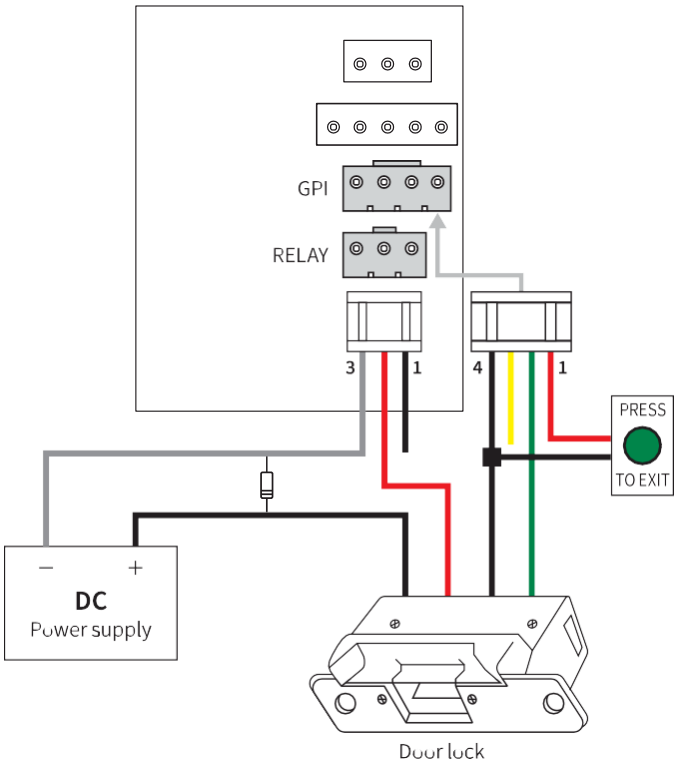

	Pin No.	Name
RELAY	1	Normal Open (NO)
	2	Common (COM)
	3	Normal Close (NC)
GPI	1	GPI 0
	2	GPI 1
	3	GPI 2
	4	Ground (GND)

Fail-Secure Configuration

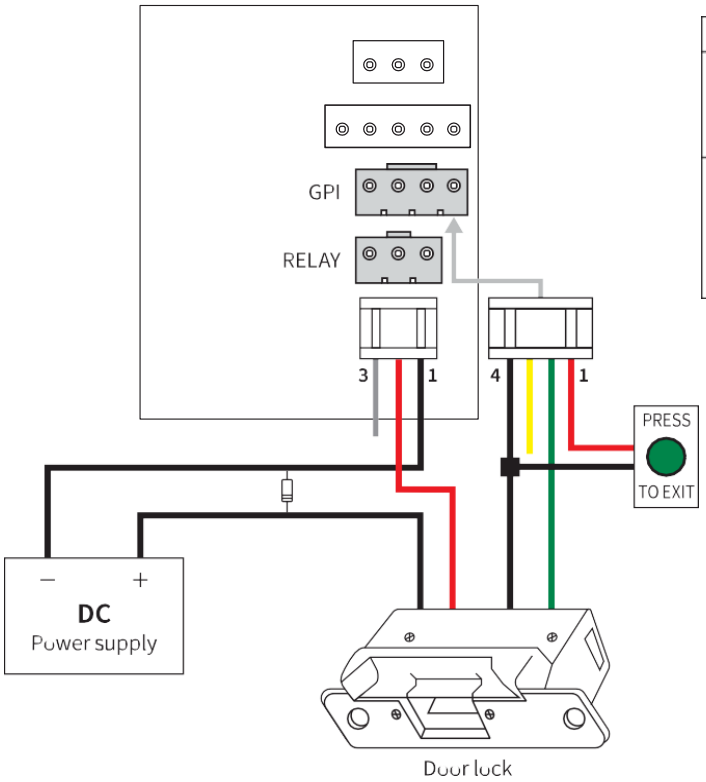

	Pin No.	Name
RELAY	1	Normal Open (NO)
	2	Common (COM)
	3	Normal Close (NC)
GPI	1	GPI 0
	2	GPI 1
	3	GPI 2
	4	Ground (GND)

Relay Connection – Automatic Door

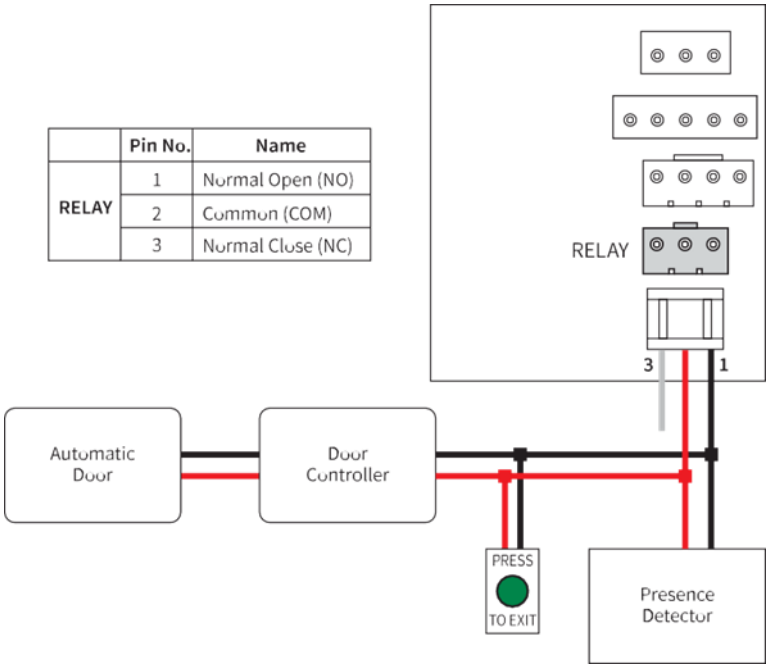

	Pin No.	Name
RELAY	1	Normal Open (NO)
	2	Common (COM)
	3	Normal Close (NC)

Relay Connection – Alarm Light

Internal relay interface with nominal switching capacity of 1 A, 30 VDC or 0.3 A, 120 VAC,resistive load.

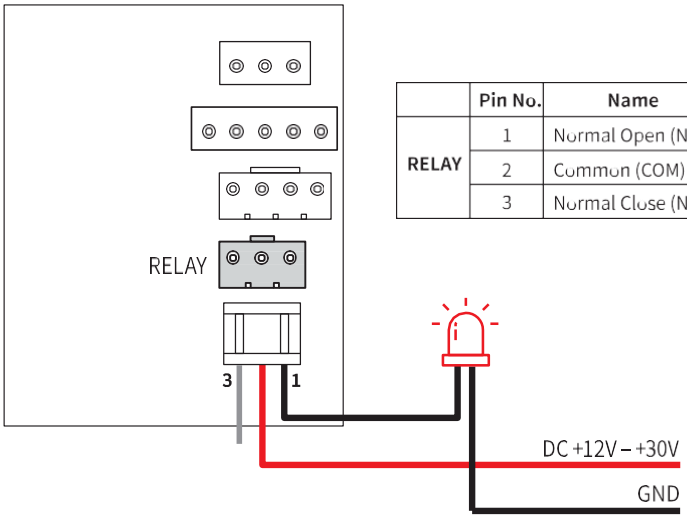

	Pin No.	Name
RELAY	1	Normal Open (NO)
	2	Common (COM)
	3	Normal Close (NC)

GPI Connection

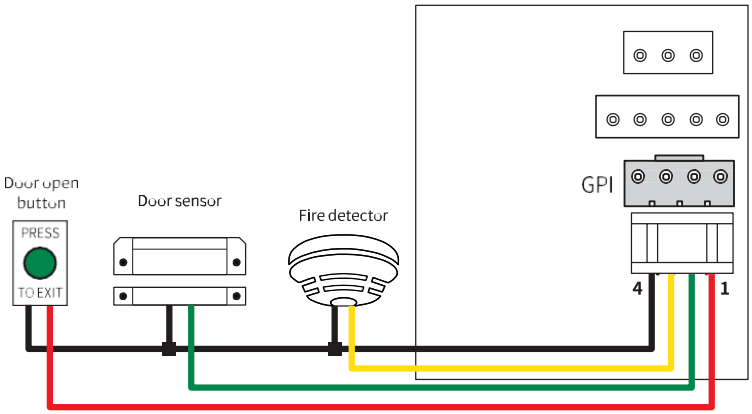

	Pin No.	Name
GPI	1	GPI 0
	2	GPI 1
	3	GPI 2
	4	Ground (GND)

Wiegand IN Connection

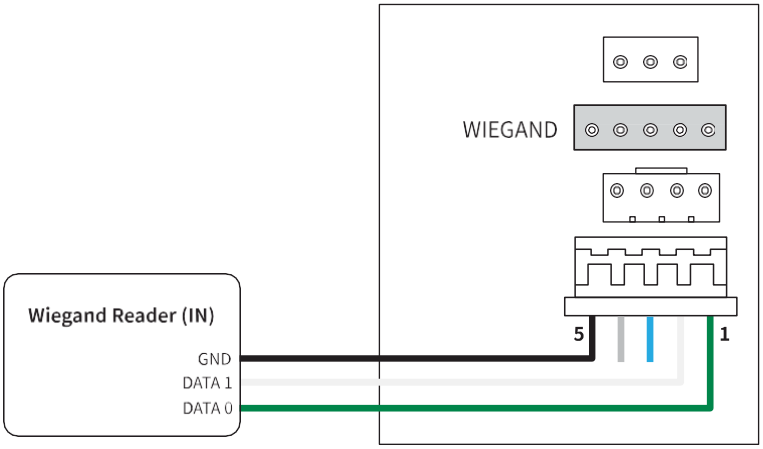

	Pin No.	Name
Wiegand	1	IN DATA 0
	2	IN DATA 1
	3	OUT DATA 0
	4	OUT DATA 1
	5	Ground (GND)

Wiegand OUT Connection

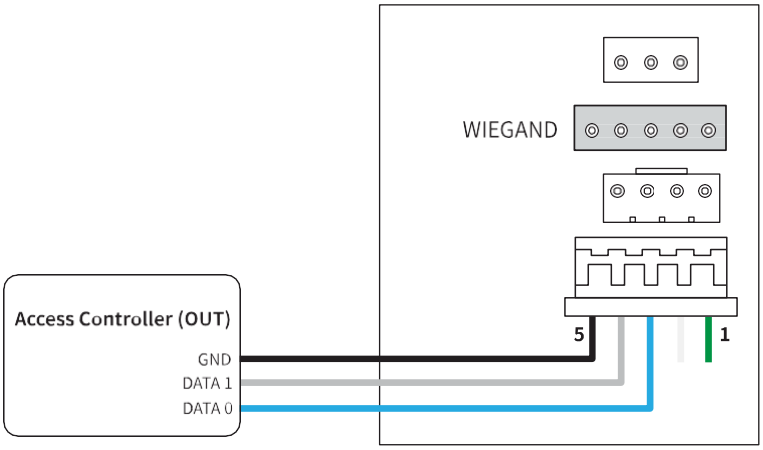

	Pin No.	Name
Wiegand	1	IN DATA 0
	2	IN DATA 1
	3	OUT DATA 0
	4	OUT DATA 1
	5	Ground (GND)

3. Using NanoFace-2

3.1. Enrollment

This section gives the procedural information to enroll users to the device.

1. Press the User button ( ) on the main screen.
2. Press **Enroll** (Enroll) in the bottom.
3. Type **ID** and **Name**.
4. Press one or more credential type buttons (Face, Card) to add to the user.
   - For **Face**, let the user stand in front of device and complete the face capture.
   - For **Card**, put the card on the device's card reader. When the CSN (card serial number) appears on the screen, press **OK**.

Optionally, select **Bypass card** to allow the user to get access permission by using a registered card alone regardless of authenticationmode

5. Press **OK** to complete the enrollment.

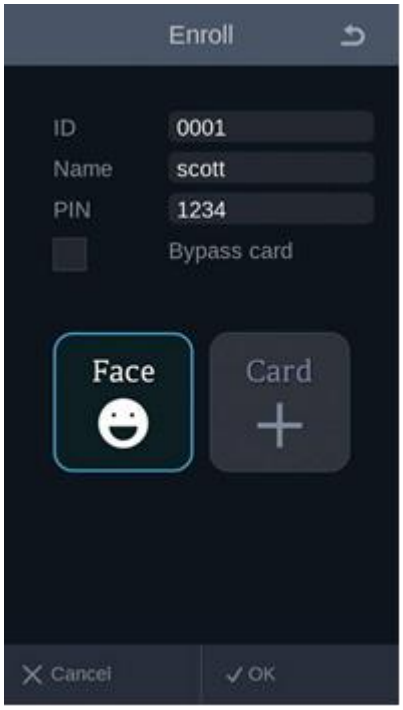

3.2. Authentication

NanoFace-2 detects and displays the subject's face over 2.0 meters from the system on the high-resolution color display. The subject will simple and naturally walk toward the face capture range of 0.4 to 2.0 meters. Once the system recognizes the subject, the result will be displayedimmediately with indication line over the subject's face image.

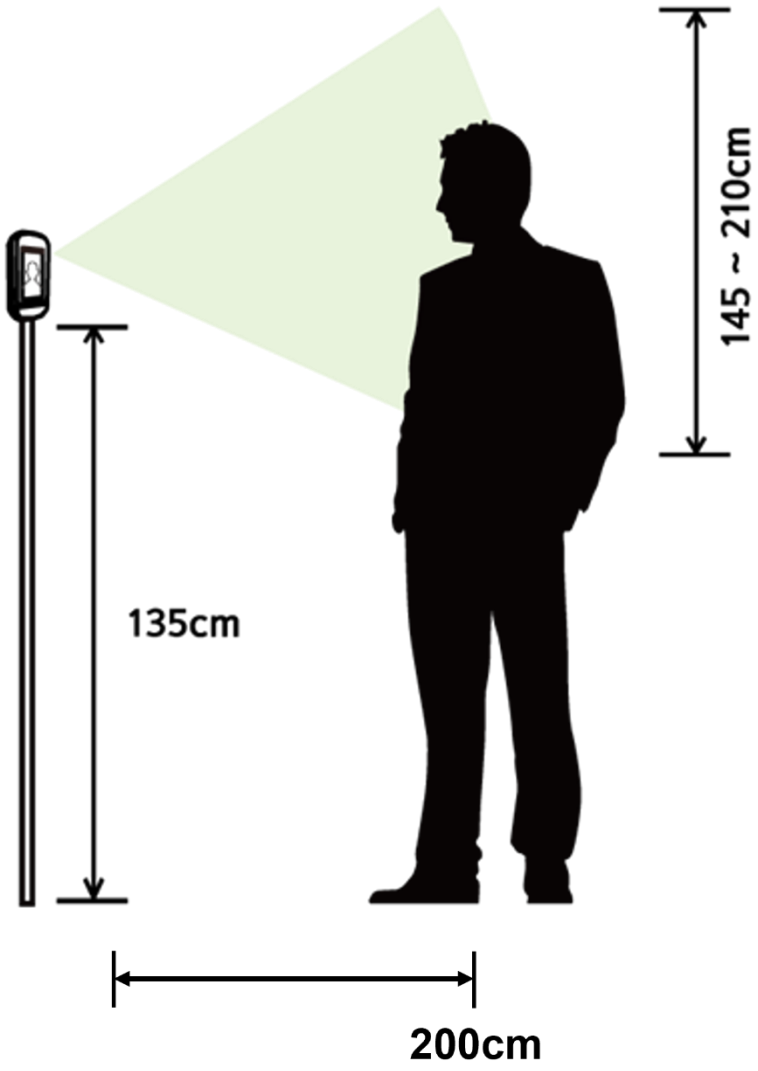

Figure 1. Capture height range at recommended camera installation height of 135 cm

3.2.1. User Instructions

1. Position yourself in front of device, while looking at screen. A white box appears around the face when your face isdetected.

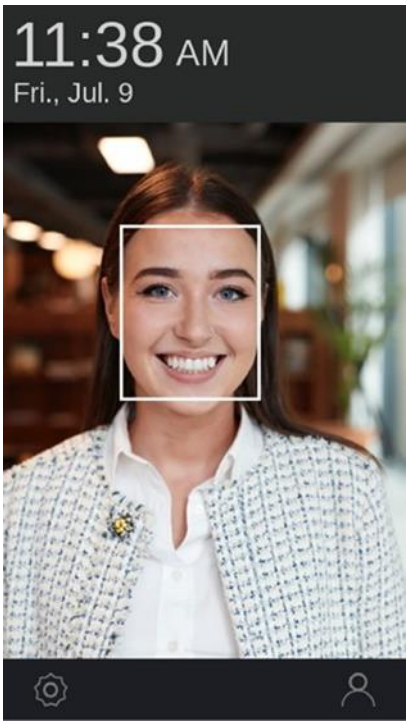

2. Authentication result is displayed on the top of the screen depending on whether your faceis recognized successfully.

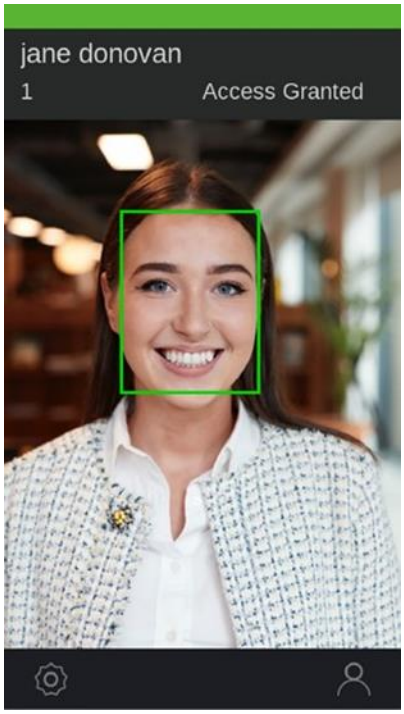

4. Product Specifications

4.1. Mechanical Specifications

4.1.1. Dimensions (unit: mm)

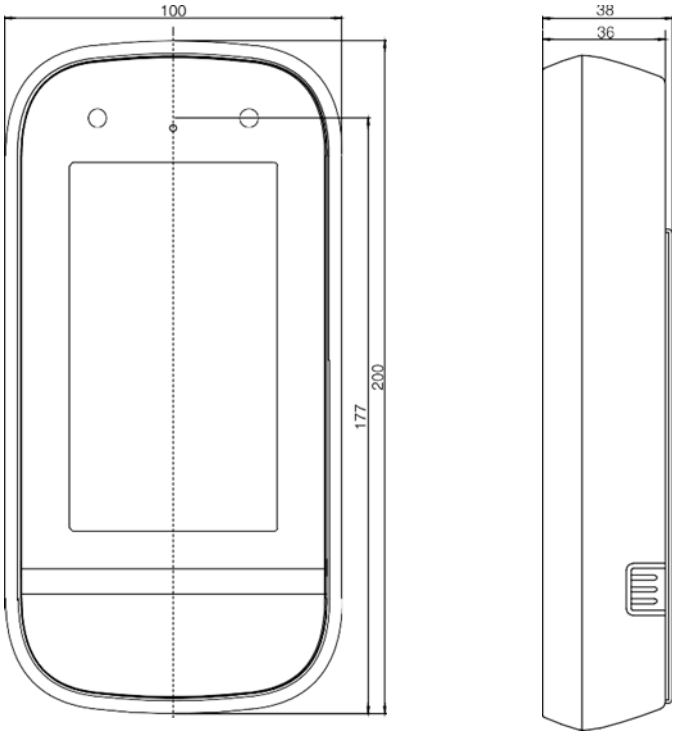

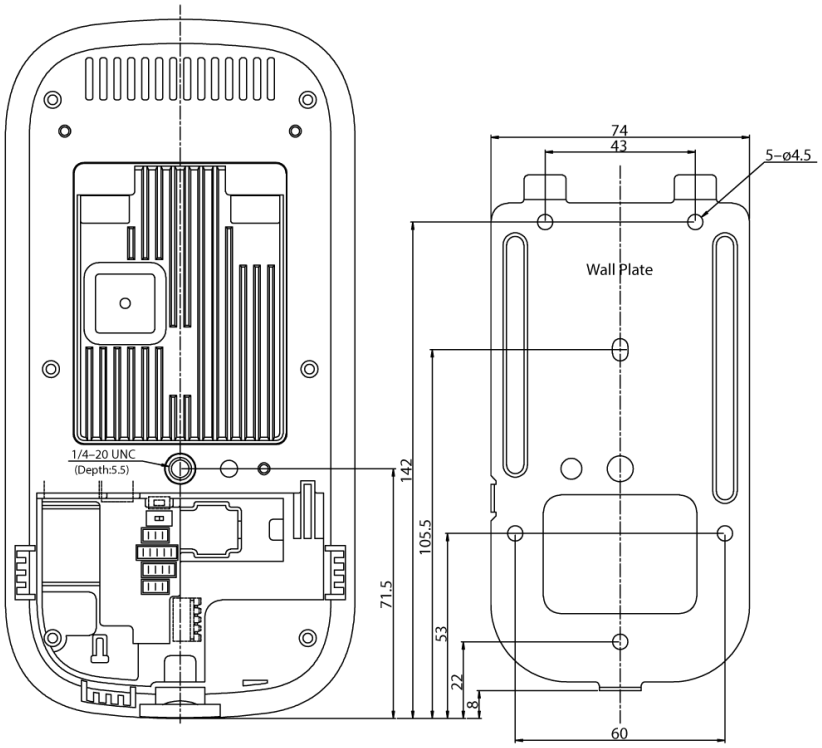

4.2. Key Technical Specifications

Item	Description
CPU	ARM Cortex A53 operating at 1.4GHz
Memory	2GB RAM, 8GB Flash
Number of cameras	Two
Display	5” LCD with touch
IR LED	YES, for low ambient light levels and supplementary face detection support
White LED	YES, for adjunct lighting of face
Ethernet	Standard 10/100 BaseT and GigE
Dimensions	100 x 200 x 36 mm
Weight	450 g (1.0 pound)
Capture range	40 cm to 200 cm
User’s height range	145 cm to 210 cm with system installed at 135 cm at 2.0 m subject to camera distance
Enrollment speed	Within 5 seconds
Recognition speed	Within 1 second total in 1:N mode with 20,000 subjects in local database
Enrollment	20,000 users total DB size (max 20,000 users in 1:N mode)
Fake face detection	YES
Mask detection	YES
Temperature range	0°C - 50°C, operating
Audio	YES (Speaker only)
Input power	DC 15V nominal, with recommended range of 15 to 24V DC
RF Card reader	ISO/IEC 14443 reader for MiFare, DesFire and FeliCa cards (standard)
Connections	RJ45 for LAN, Wiegand IN/OUT, GPIO (3), RS485, dry contact relay, optional POE+ (special order)
USB	Service mode only

4.3. Cables and Connectors

Relay

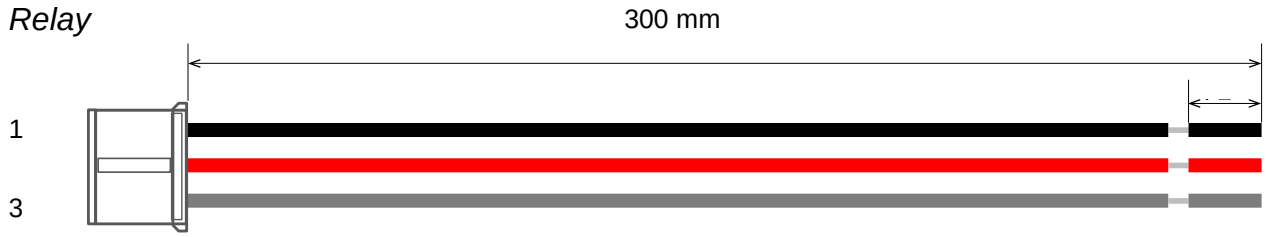

Pin	Name	Color	Wire Gauge
1	Normal Open (NO)	Black	24 AWG
2	Common (COM)	Red	
3	Normal Close (NC)	Gray	

GPI

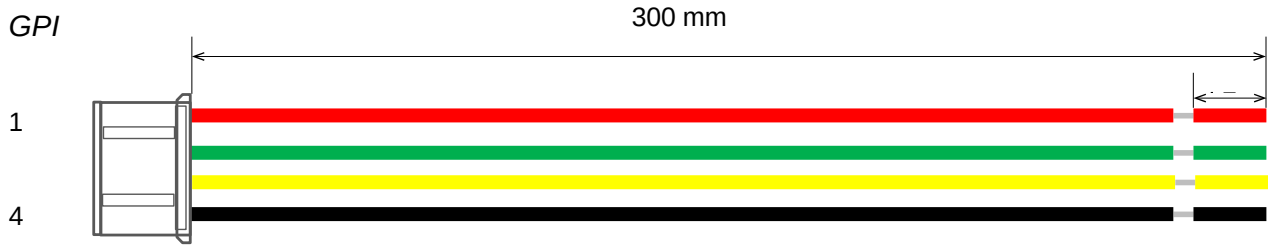

Pin	Name	Color	Wire Gauge
1	GPI 0	Red	24 AWG
2	GPI 1	Green	
3	GPI 2	Yellow	
4	Ground (GND)	Black	

RS-485

Pin	Name	Color	Wire Gauge
1	DATA (-)	Red	24 AWG
2	DATA (+)	Green	
3	Ground (GND)	Black	

Wiegand IN/OUT

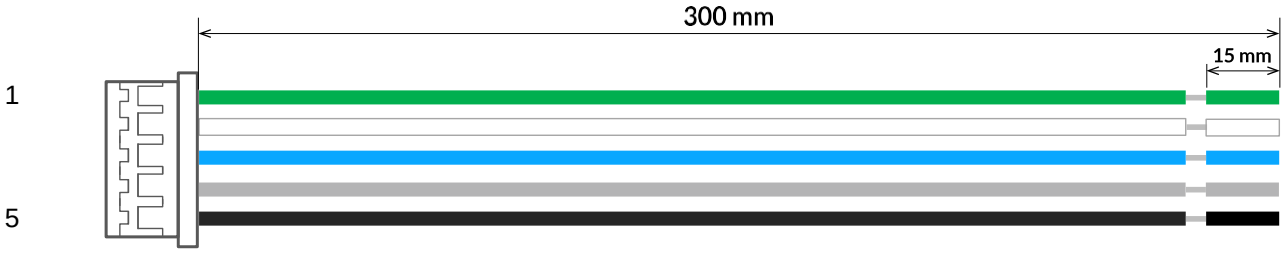

Pin	Name	Color	Wire Gauge
1	IN DATA 0	Green	
2	IN DATA 1	White	
3	OUT DATA 0	Blue	24 AWG
4	OUT DATA 1	Gray	
5	Ground (GND)	Black	

Power

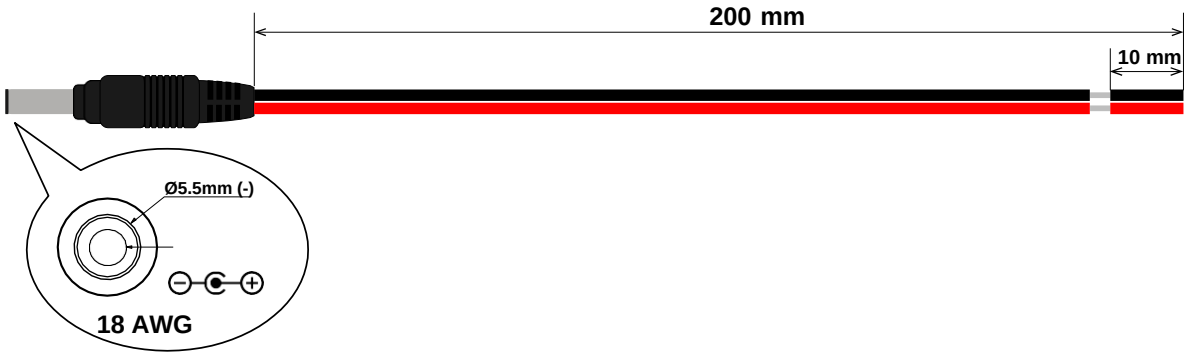

4.4. Environmental Specifications

Item		Description
Temperature	Operating	0°C to 50°C (32°F to 122°F)
	Non-operating	-20°C to 60°C (-4°F to140°F)
Humidity	Operating	8% to 85% relative humidity, non-condensing
	Non-operating	8% to 90% relative humidity, non-condensing

Appendix A: OSD Menu List

This appendix gives the details about advanced setting menus of the NanoFace-2 system's On Screen Display that appears when you press the Gear button ( ) on the home page of the main screen.

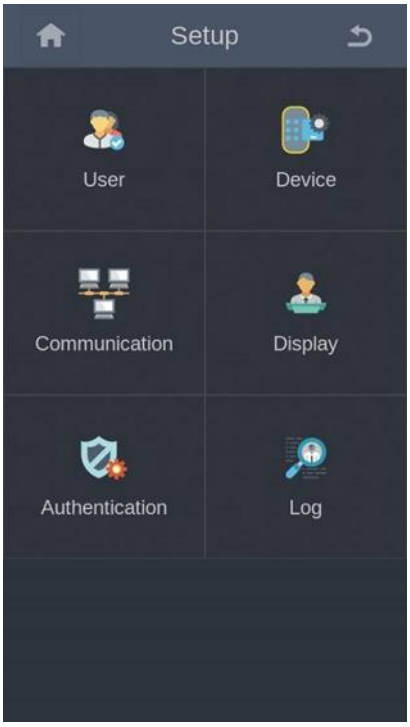

A.1. User

Name	Description
Enroll	Starts user enrollment
Delete	Deletes users
Modify	Edits user information by pressing an registered user
Search	Finds users by ID

A.2. Device

Name		Description
Bio	Fake face	Selects a fake face detect option
	Use mask	Selects whether to use mask detection
	Mask alarm	Selects the type of action that the device should takewhen no mask is detected (**Not used**, **Warning message**, **Access deny**)

Name		Description
	Face image log	Selects whether to show face image on event log
Date/Time	Time settings	Configures device date and time
Door	Relay	Selects whether to use relay
	Open duration	Configures time duration for door open relay
	Use exit	Selects a GPI port number connected to exit door button (**Not used**, **GPI Port 1**, **GPI Port 2**, **GPI Port 3**)
	Exit type	Selects contact state of the GPI port that exit doorbutton uses (**NC**, **NO**)
	Use alarm	Selects a GPI port number connected to alarm sensor(**Not used**, **GPI Port 1**, **GPI Port 2**, **GPI Port 3**)
	Alarm type	Selects contact state of the GPI port that alarm sensoruses (**NC**, **NO**)
	Use sensor	Selects a GPI port number connected to sensor (**Notused**, **GPI Port 1**, **GPI Port 2**, **GPI Port 3**)
	Sensor type	Selects contact state of the GPI port that sensor uses(**NC**, **NO**)
	Held open duration	Types acceptable door held open period
Tamper	Mode	Selects a tamper protection mode (**Not used, Beep mode, Secure mode**)

If you select Secure mode, all the data and settings are deleted permanently in device when physical tampering is detected / attempted.

Device info	Device name	Configures the device name
	Model	Shows the model name
	FW version	Shows the device firmware version
	APP version	Shows the application version
	MAC	Shows the MAC address
	S/N	Shows the serial number
	IOMicom version	Shows the IO Micom revision number

Name		Description
	H/W version	Shows the hardware revision number
	RF Micom version	Shows the RF Micom revision number
	Algo version	Shows the algorithm revision number
Database	User import	Imports the user database from connected USB drive
	User export	Exports the user database to connected USB drive
	Debug export	Exports the debug data to connected USB drive
LED signal		Configures LED signal through EF-IO (Under development)
Camera	Camera mode	Not used
	Outdoor mode	Select whether to use face capture mode for outdoor environment under natural lighting
Reset	Device reboot	Restarts device
	Factory reset	Resets all configuration settings and deletes all user data
	Reset all config	Sets all configuration settings to default
	Reset all users	Deletes all user data

Name		Description
Database	User import	Imports the user database from connected USB drive
	User export	Exports the user database to connected USB drive
	Debug export	Exports the debug data to connected USB drive
LED signal		Configures LED signal through EF-IO (*Under development*)
Camera	Camera mode	Configures the power supply frequency of an electric light where the camera is used (**50Hz**, **60Hz**)
	Outdoor mode	Select whether to use face capture mode for outdoor environment under natural lighting
	When enabled, it overrides **Cameramode**.	
Reset	Device reboot	Restarts device
	Factory reset	Resets all configuration settings and deletes all userdata
	Reset all config	Sets all configuration settings to default
	Reset all users	Deletes all user data

A.3. Communication

Name		Description
TCP/IP	User DHCP	Selects whether to use DHCP
	IP	Shows the device's IP address
	Subnet	Shows the subnet mask
	Gateway	Shows the gateway address
	DNS 1	Shows the DNS #1
	DNS 2	Shows the DNS #2
Server	User server	Selects whether to use server

Name		Description
	Server IP	Types the server's IP address
	Port	Types the server's port number
	Commute Uri	Type server URI to receive T&A event logs from device
	Sync Uri	Type server URI to receive T&A event logs backed up by server

A.4. Display

Name	Description
Language	Selects a display language
Time display	Selects time notation between 12-hour and 24-hour clock format (12 hours, 24 hours)
Menu timeout	Select timeout for auto exit from menu display after leaving it untouched
Screensaver	Selects whether to use screensaver

A.5. Authentication

Name		Description
Auth mode	Mode	Selects a authentication mode (Face only, Face or card, Face and PIN, Card and face, Card and PIN)
	Bypass	Allows unregistered users to access
	Mask reject	Denies access if wearing a mask is detected
	Touch start	Starts recognition by touching the screen
	Recog threshold	Adjusts match threshold (permitted value range: 90 to 100)
		Increasing the threshold value increases FRR (false rejection rate) whereas decreasing the value increases FAR (false acceptance rate).
	Recog distance	Selects the distance from where face detection starts
TA	Use T&A	Selects whether to use T&A functions

Admin password	Use admin pw	Selects whether to use admin password
	Password	Types admin password
Card	Use CSN	Selects CSN order on card reading (MSB, LSB)
	CSN order	Selects CSN order on card reading (MSB, LSB)
Wiegand	Output type	Selects Wiegand output type (Wiegand, Card, ID)

A.6. Log

Name		Description
Log info	Total used	Shows the used space for logs in percent
	Total count	Show the total count of logs
Log delete	Delete log	Deletes all logs

Contact Information

Please contact EyeLock or your representative for more information about the NanoFace-2 / 2N product, NanoFace Software Development Kits (SDK) and other supporting software.

Eyelock, LLC
180 Marcus Blvd
Hauppauge, NY 11788

Tel: +1.855.393.5625
Contact: sales@eyelock.com or
service@eyelock.com